AMLWPLED/CCT/PC

Features

Robust compact wall mounted luminaire for general accent illumination

All polycarbonate vandal resistant body with fresnel lens

Tamper-proof allen key screws supplied as standard

Multiple conduit entry and BESA box fixing points

Selectable CCT between 3000K and 4000K output

Photocell and sensor options

LED lifespan L70 56,000 hours

General Information

Lamp Type	LED
Colour / Finish	Black
Photocell	Yes
IP Rating	IP65
IK Rating	IK08
Class Protection	2
Internal / External	External
Surface / Recessed / Suspended	Surface
Warranty (Years)	5
CE Mark	Yes
Width (mm)	150
Height (mm)	271
Depth (mm)	86

Technical Information

Wattage	15W
Lumens Delivered	1446lm (Cool White), 1172lm (Warm White)
Lm/W	96lm (Cool White), 78lm (Warm White)
CRI	Ra 80
CCT	3000/4000K
Input	230V
Hertz	50/60Hz
Operating Temp	-10°C to 40°C

Datasheet generated from https://onetimepim.com last updated Tuesday, March 30, 2021 8:29:53 AM

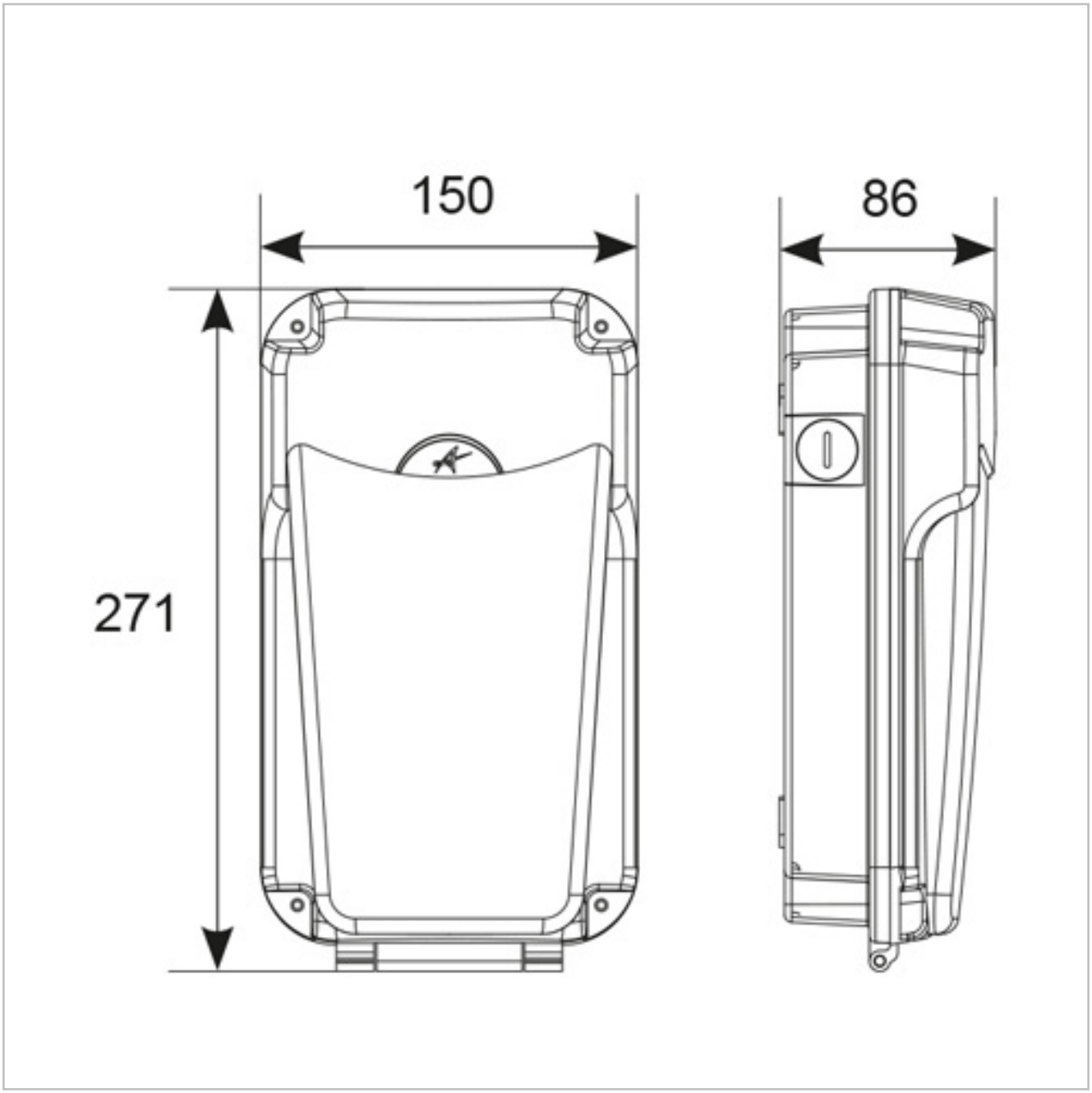
150
86
271