AMFLWB

Features

Unique, innovative IP65 adaptable installation box for mini floodlights (up to 5Kg)

Universal mounting allows for neat, tidy and speedy installation

Polycarbonate construction ideal for coastal and adverse weather applications

Central M6 fixing bolt with locking washer and shakeproof nut

20mm side and top drill outs for conduit, cable gland or sensor mounting

Generous, polycarbonate enclosure, suitable for housing smart wireless controls

IK08 impact rating offers superior product durability

Captive quick-release cover screws

General Information

IP Rating	IP65
IK Rating	IK08
Internal / External	External
Surface / Recessed / Suspended	Surface
Warranty (Years)	5
Width (mm)	107
Height (mm)	115
Depth (mm)	40.5

Datasheet generated from https://onetimepim.com last updated Wednesday, June 15, 2022 8:51:03 AM

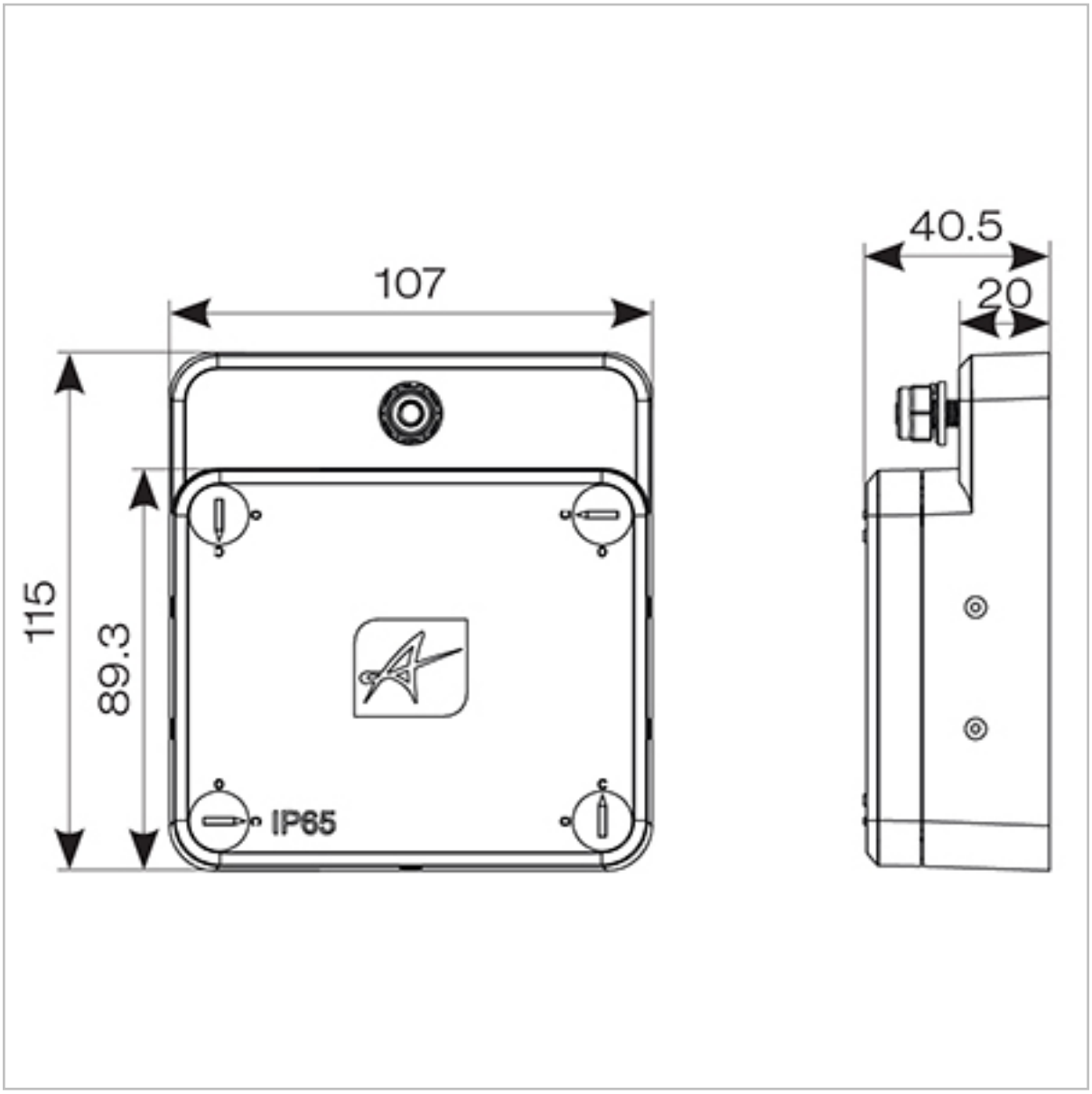
107
115
89.3
IP65
40.5
20