AMELED/ER/3NM/ST/B

Merlin LED Emergency Downlight 5W Non-Maintained - Escape Route Black

Features

Ultra-low profile recessed self-test emergency downlight.

Self-test as standard.

Option of escape route or open area models.

High specification optic design and performance allows increased spacing providing reduced cost.

Up to 19.6 metres spacing between luminaires

General Information

Lamp Type	LED
Colour / Finish	Black
Emergency	Yes
Self Test	Yes
IP Rating	IP20
Class Protection	1
Internal / External	Internal
Surface / Recessed / Suspended	Recessed
Warranty (Years)	3
CE Mark	Yes
Diameter (mm)	85
Height (mm)	57
Accessories	ASBP/9

Technical Information

Wattage	5W
Lumens Delivered	229lm
Beam Angle	140 x 53
CCT	6500K
Input	230V
Hertz	50/60Hz
Operating Temp	0°C to 45°C

Technical Data - ETIM - Emergency luminaire (EC001957)

Mounting method	Built-in
Function	Escape route lighting
Monitoring equipment	Automatic self test
With light source	Yes
Colour housing	Black
Nominal voltage	230-230 V
Degree of protection (IP)	IP20
Protection class	I
Max. system power	5 W
Colour temperature	6500-6500 K
Height/depth	57 mm
Outer diameter	85 mm

Datasheet generated from https://onetimepim.com last updated Monday, September 28, 2020 11:59:09 AM

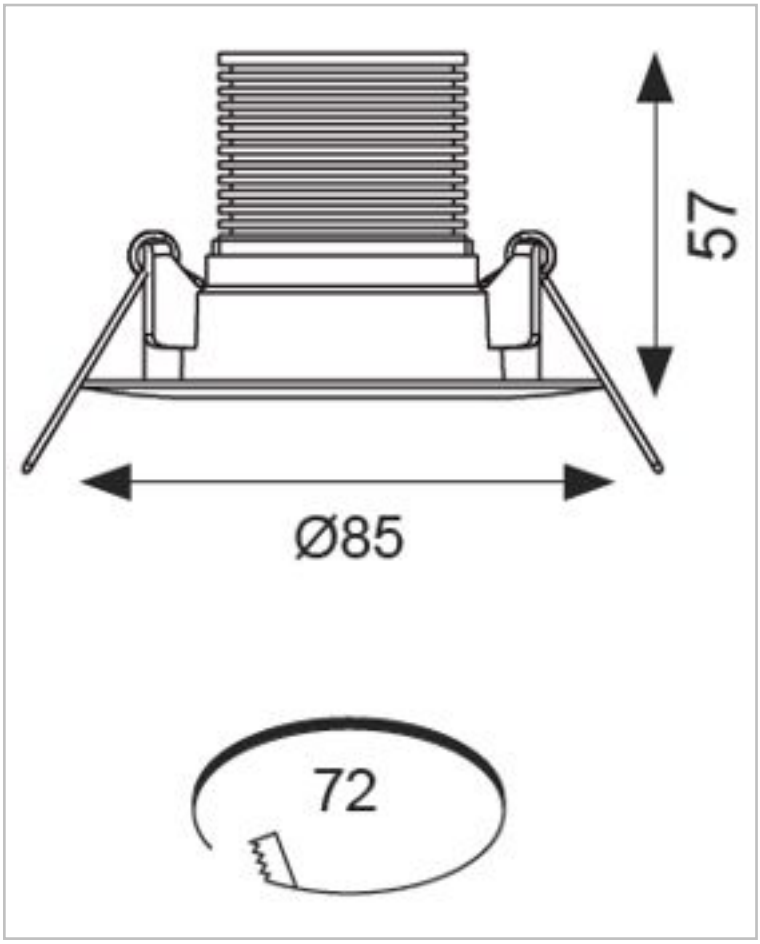
57
Ø85
72