AARGD/CW

Argo LED IP65 Downlight 5W - Cool White

Features

Compact polycarbonate LED downlight

IP65 rating as standard allows for a range of installation applications

Low profile design with integral driver with loop-in, loop-out terminals for ease and speed of installation

Option of black, chrome and satin chrome bezel accessories

Exceeds performance of 35W halogen

LED lifespan L70 25,000 hours

Non-dimmable

General Information

Lamp Type	LED
Colour / Finish	White
IP Rating	IP65
Class Protection	2
Internal / External	Internal/External
Surface / Recessed / Suspended	Recessed
Warranty (Years)	2
CE Mark	Yes
Diameter (mm)	95
Height (mm)	56
Accessories	AARGD/IP65BEZ/BL, AARGD/IP65BEZ/CH, AARGD/IP65BEZ/SC

Technical Information

Wattage	5W
Lumens Delivered	438lm
Lm/W	87lm
Beam Angle	60
CRI	Ra 80
CCT	4000K
Input	220V - 240V
Hertz	50/60Hz
Operating Temp	-15°C to 40°C

Technical Data - ETIM - Downlight/spot/floodlight (EC001744)

Suitable for surface mounting	No
Suitable for built-in mounting	Yes
Suitable for wall mounting	No
Suitable for suspended mounting	No
Suitable for ceiling mounting	Yes
Suitable for traverse mounting	No
Suitable for pedestal/floor mounting	No
Suitable for light-track mounting	No
Adjustability	Not adjustable
With movement sensor	No
With light sensor	No
With light source	Yes
Suitable for number of lamps	1
Material housing	Plastic
Colour housing	White
Nominal voltage	220-240 V
Control gear included	Yes
No dim function	Yes
Beam angle	Wide beam 41-80°
Degree of protection (IP)	IP65
Protection class	II
Max. system power	5 W
Colour of light	White
Colour temperature	4000-4000 K
Colour rendering index CRI	80-89

Rated luminous flux acc. IEC 62722-2-1	438 lm
Lamp efficacy	87 lm/W
Height/depth	56 mm
Outer diameter	95 mm

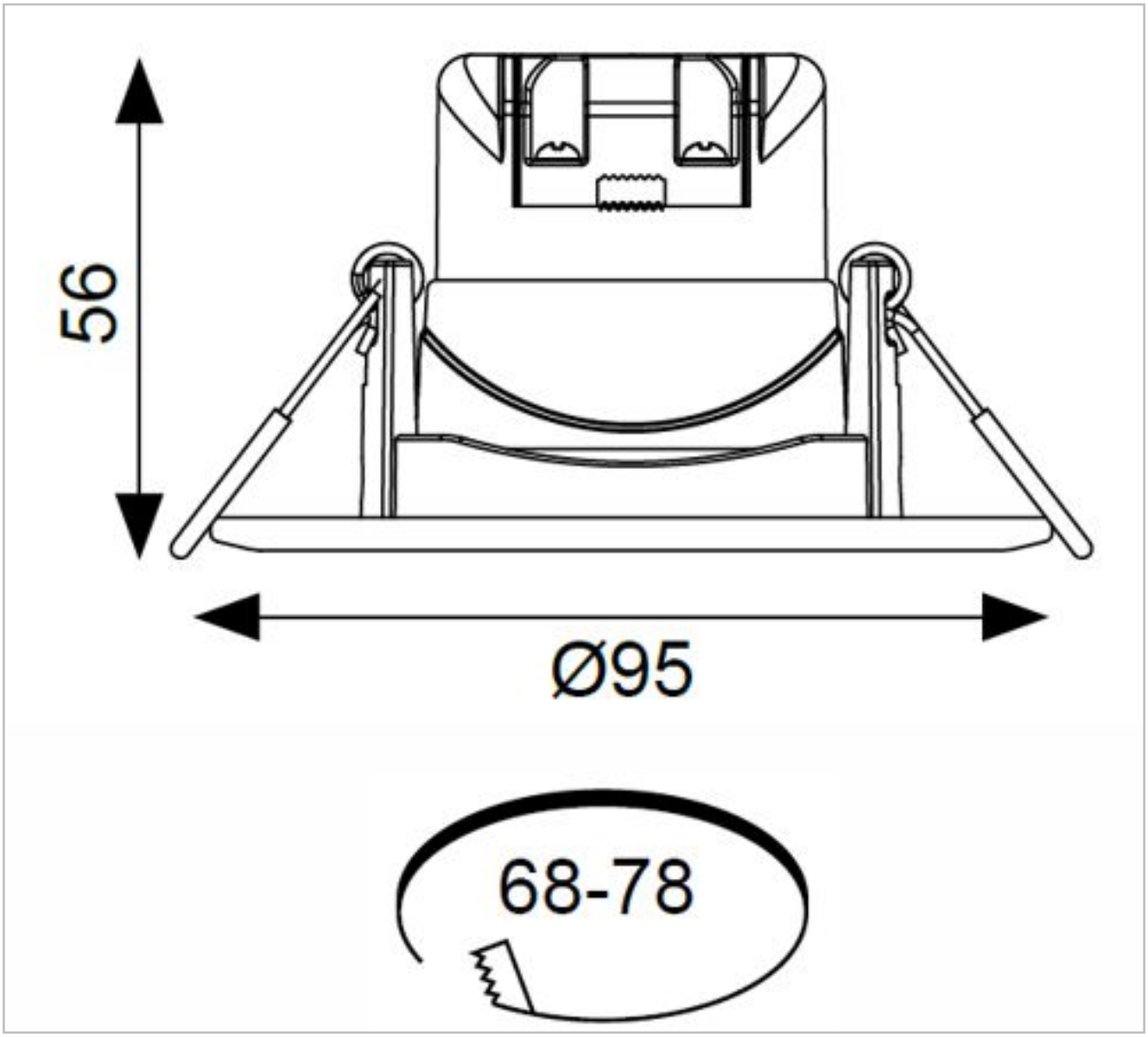

Datasheet generated from https://onetimepim.com last updated Monday, November 4, 2019 1:42:12 PM