GU10 Up/Down Light

Safety Instructions

•Ensure the power supply is switched off before installation.
•Do not install this up/down light where the ambient temperature can be below -20°C or exceeds 40ºC.
•This up/down light must be mounted on a non-flammable surface.
•After turning on the switch, temperature of bulb rises gradually, when bulb is lighting or not completely cooled, please don't touch bulb with hand.
•It should change bulb, please cut off the power first, then change the bulb after the bulb has been cooled enough (for details see the specified of changing bulb).
•The bulb must not exceed the specified wattage.
•When the lamp cover is broken, please change it as soon as possible, Never use the bulb after the bulb without lamp cover.
•Please don't look at the lighting directly.
•This up/down light is of Class I construction and must be earthed.
•Do not use this up/down light if it appears damaged in any way.
•This up/down light must be installed in accordance with the current edition of the IEE Wiring Regulations.
•Please use the double-pole-off switch.

If in doubt, contact a qualified electrician.

Maintenance instructions

•There are no user serviceable parts in this fitting.
•Periodically clean the housing and lens with a clean damp cloth and dry with a lint free cloth.

Installation Instructions

BEFORE ATTEMPING TO INSTALL UNITS, ENSURE POWER IS OFF, AND PLEASE PAY ATTENTION TO FOLLOWING STEPS:

Installation of the wall lamp

•First install plastic expansion piece in wall.
•Insert two fixed screws in plastic plate.
•Feed wire from the wall to the protective sleeve. Fix the plastic plate onto the plastic expansion piece with self-tapping screws.
•Connect 230Vac supply wires to terminal block, making sure all connections are tight. When connecting the cable to the power supply, ensure the correct polarity is observed.
- Brown to live (L)
- Blue to neutral (N)
- Green / Yellow to earth (⏚)

•Refit terminal block cover to terminal box with screws.
•Fit fitting base onto the base cover with screws.
•Open upper lamp cover, screw a new bulb into lampholder, and close theupper cover, the bulb must not exceed wattage specified on the fixture label.

DIRECTION OF CHANGE BULB:

•Turn off the power.
•Open the upper cover of the lamp, Don't touch bulb with bare hand.
•After the bulb has cooled, twist out the bulb slightly.
•When installing bulb, please twist bulb into socket carefully
•Before turning on the power, please ensure to assemble the upper cover of the lamp correctly.

Power supply: 230V AC~50Hz **Lamp type: GU10 LED Max 2 × 5W Preferable** **Waterproof: IP54**

WARNING:

Before proceeding, make sure the wall light is switched OFF and the electricity is switched OFF at the mains supply board

CE IP54
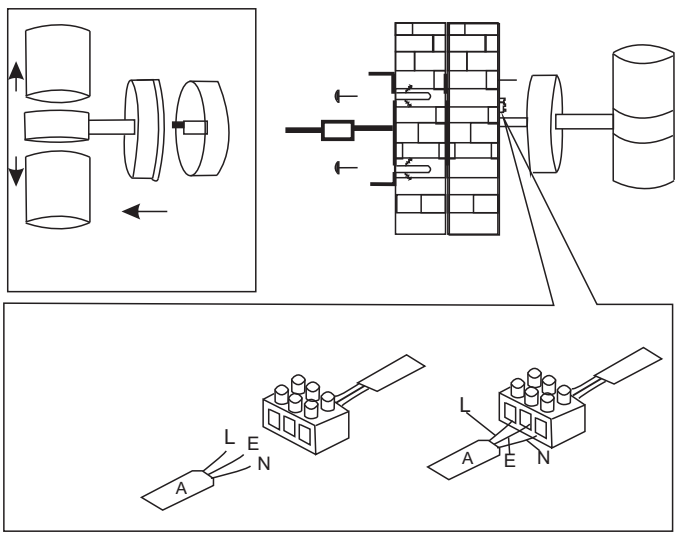
IF IN DOUBT ABOUT FITTING THIS PRODUCT, PLEASE CONSULT A QUALIFIED ELECTRICIAN