Thermal management system
Dimensions

New

Cooling units

Top-mounting models: dimensions and cut-outs

NSYCU••400R••

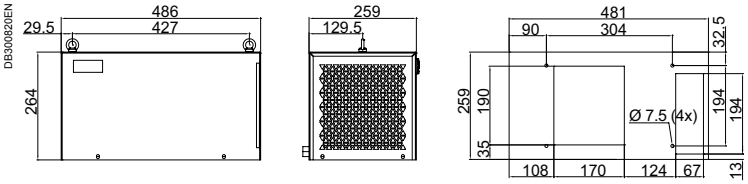

NSYCU••800R••

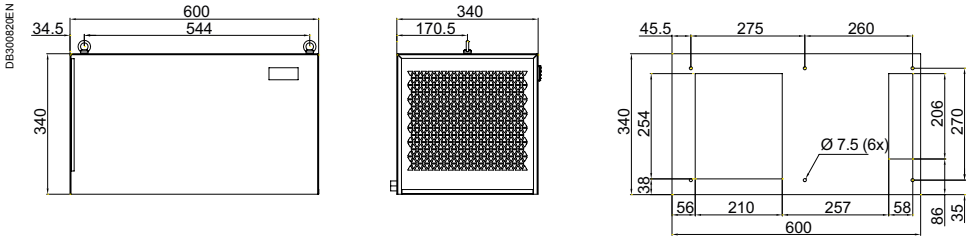

NSYCU••1K2R•• - NSYCU••1K5R•• - NSYCU••2K••R••

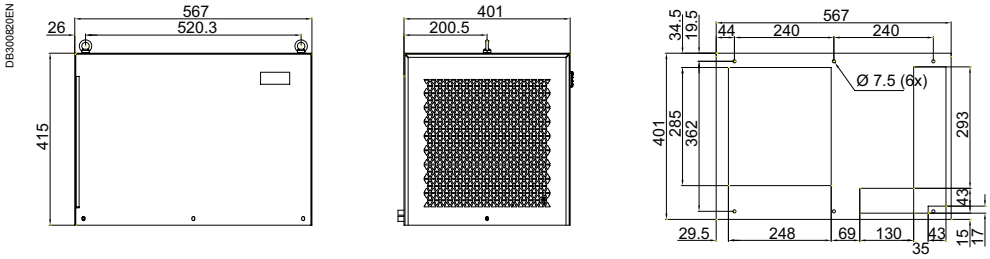

NSYCU••3K3P4R•• - NSYCU••4K3P4R••

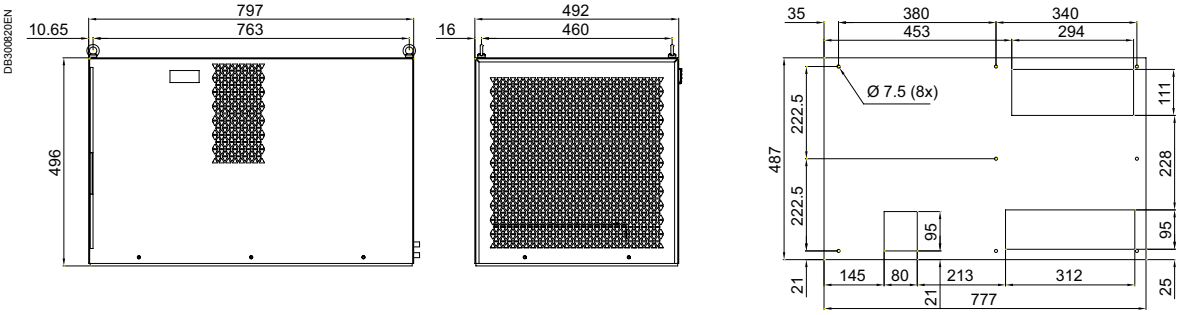

Units of measurement are mm.

Life Is On Schneider Electric