Loadline MCCB
YA3 1-pole, YA3 3-pole and 4-pole dimensions

Dimensions

YA3 1-pole

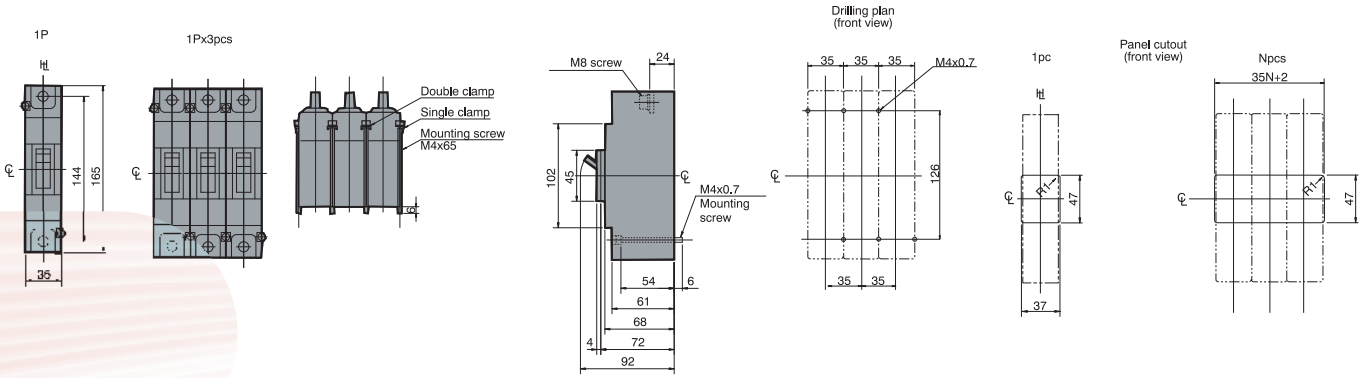
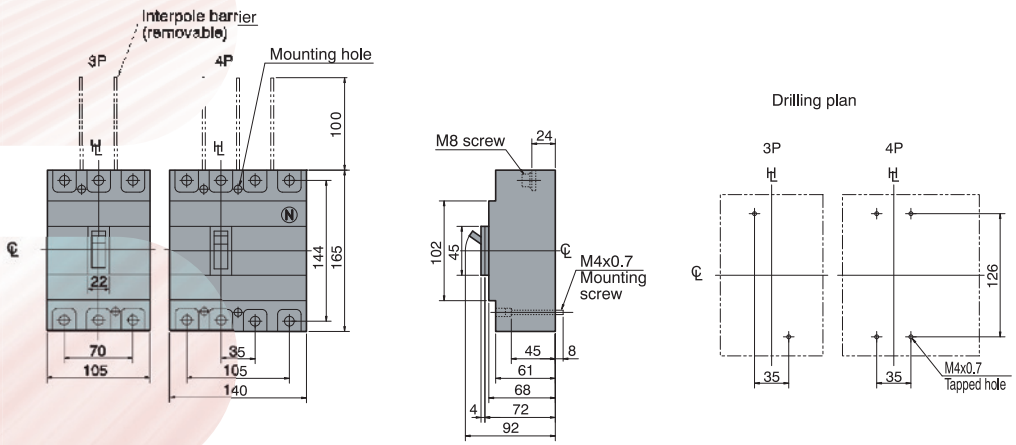
YA3 3 and 4-pole